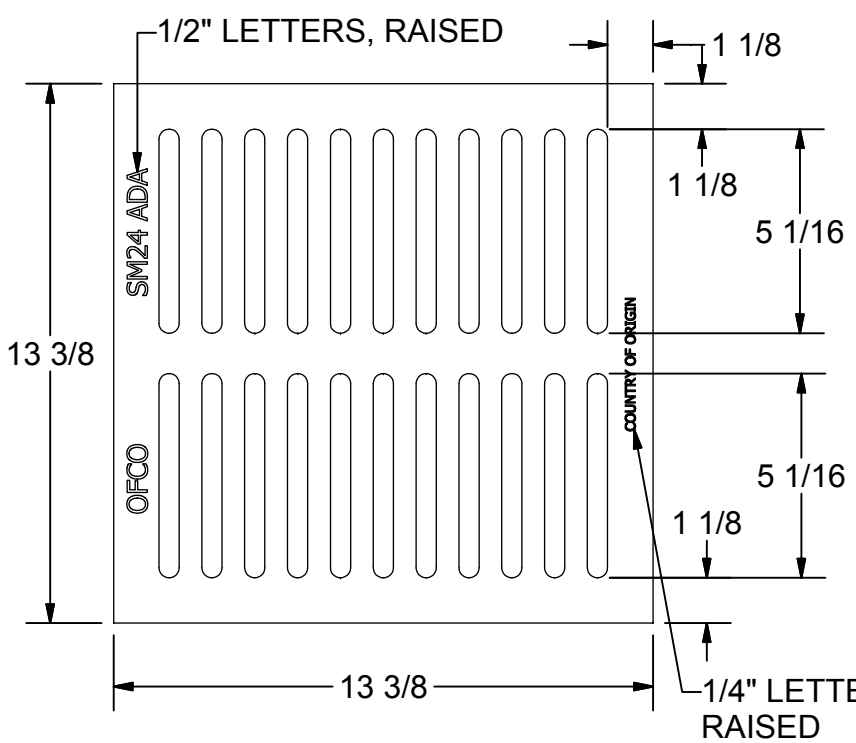

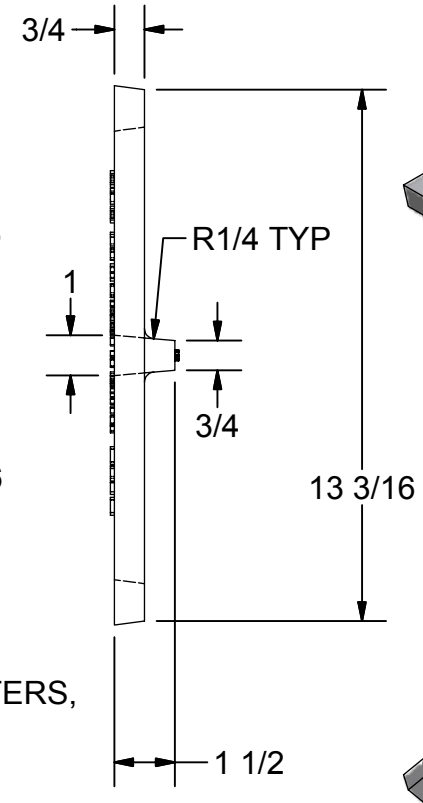

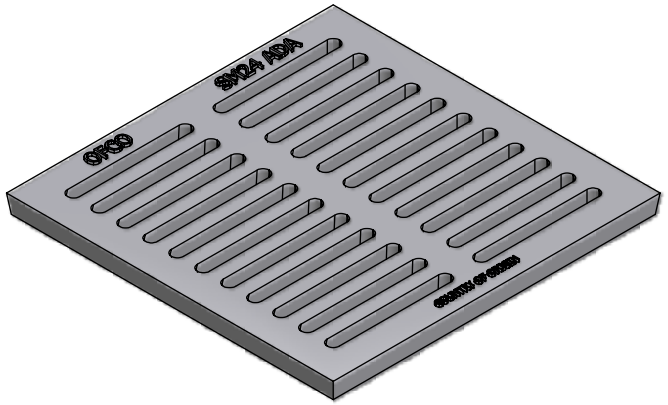

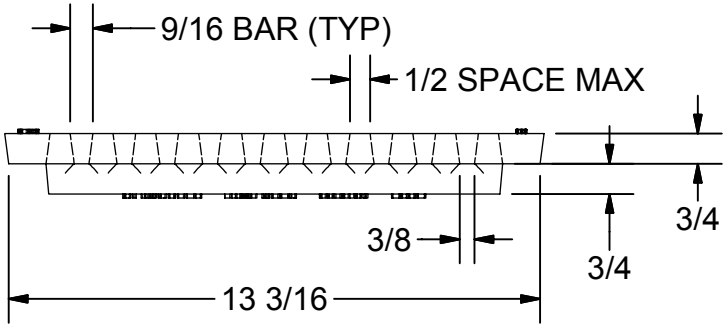

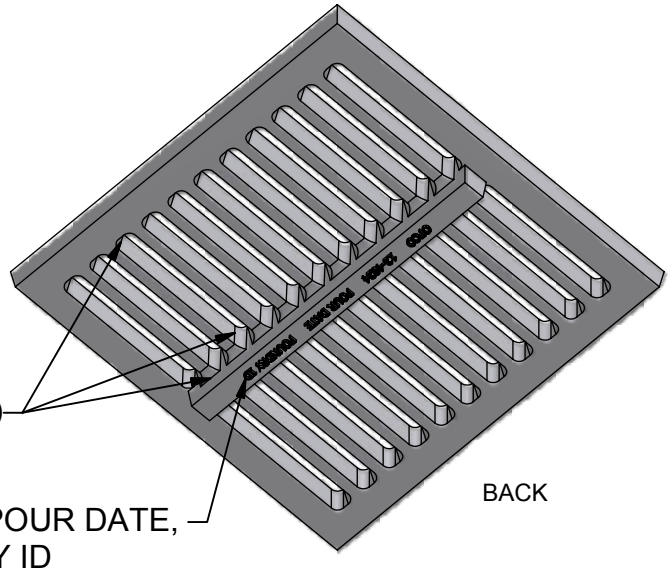

NOTES:
STANDARD BLACK PAINT

PARTS LIST

GRATE: 12-4024
FRAME: 12-4020
SET: 12-4024NSET

MATL: CI ASTM A48 CL30
APX WT. 21 LBS.

OLYMPIC FOUNDRY INC.

TITLE SM24 ADA GRATE

NOT SUITABLE FOR H20 APPLICATIONS | PART NO. 12-4020

REV:
REV:
REV:

REV -

DOC APPVD BY: DATE:

DWN: CM 08/07/2009
CHKD: FS 9/14/2009

TOLERANCES:
X.X = ± .1 X.XXX = ± .03 = ± 2°
X.XX = ± .06 FRAC = ± 1/16

DWG NO: 12-4024 SM24 GRATE ADA | SCALE: N/A | SH 1 OF 1