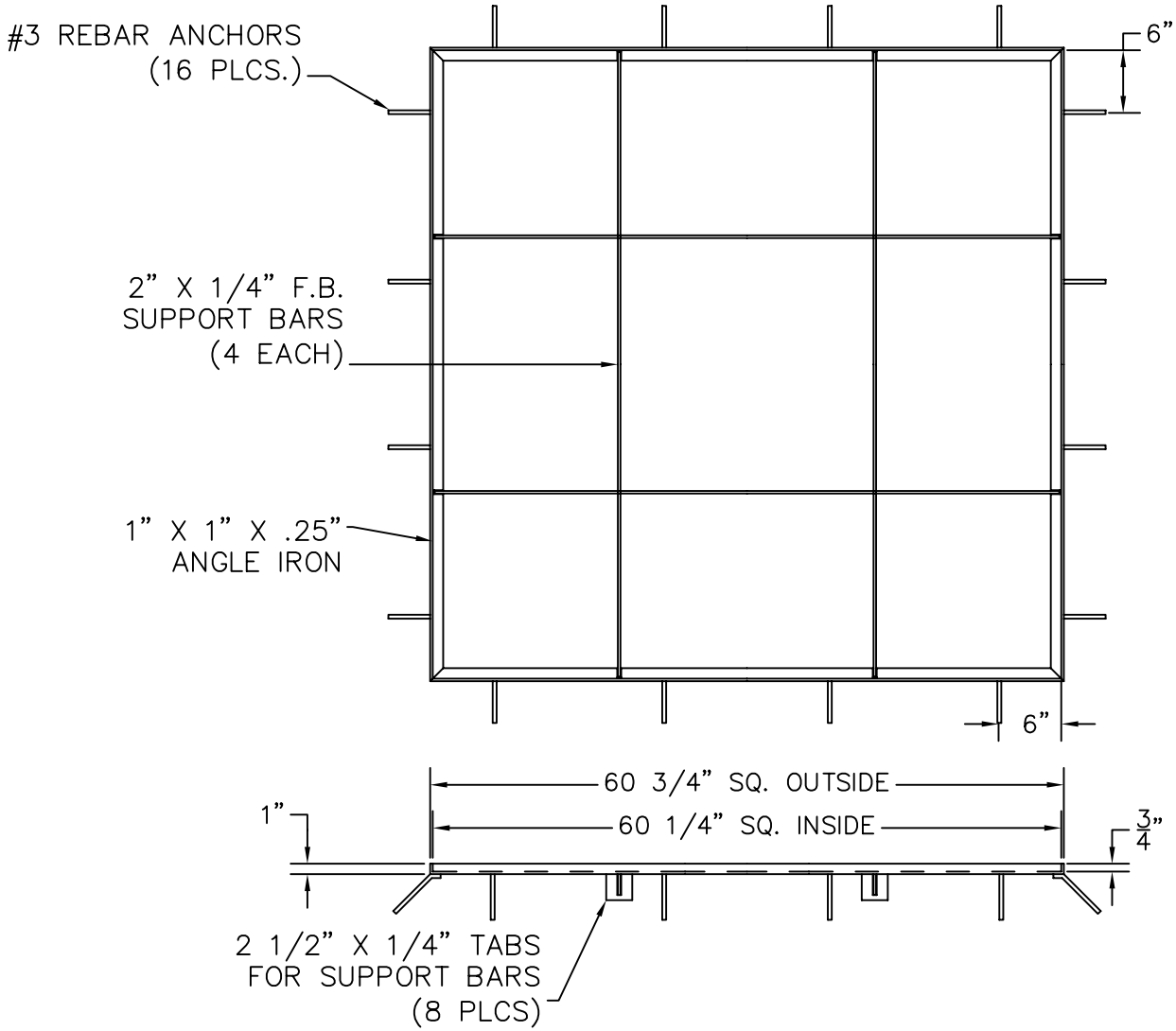

NOTES:
SUPPLIED BARE UNLESS OTHERWISE SPECIFIED

OLYMPIC FOUNDRY INC.

60" SQ. STYLE " CI" TREE GRATE FRAME WITH CROSS BARS

MATL: MILD STEEL		RATING: N–A	PART NO. 82–3000
APPROX WT: 66 LBS.		REV: A DATE: 06/01/06 NEW BORDER	REV A
DOCUMENT APPROVED BY: DATE:	DWN: CM DATE: 05/26/06	REV: X DATE:	
	CHKD: CM DATE: 05/26/06	DWG #: 60 CI WITH CROSS BARS 1"	SCALE: N/A / SHEET: 1 OF 1

TOLERANCE
XX ± .1
XXX ± .06
XXXX ± .030
< ± 2 DEG