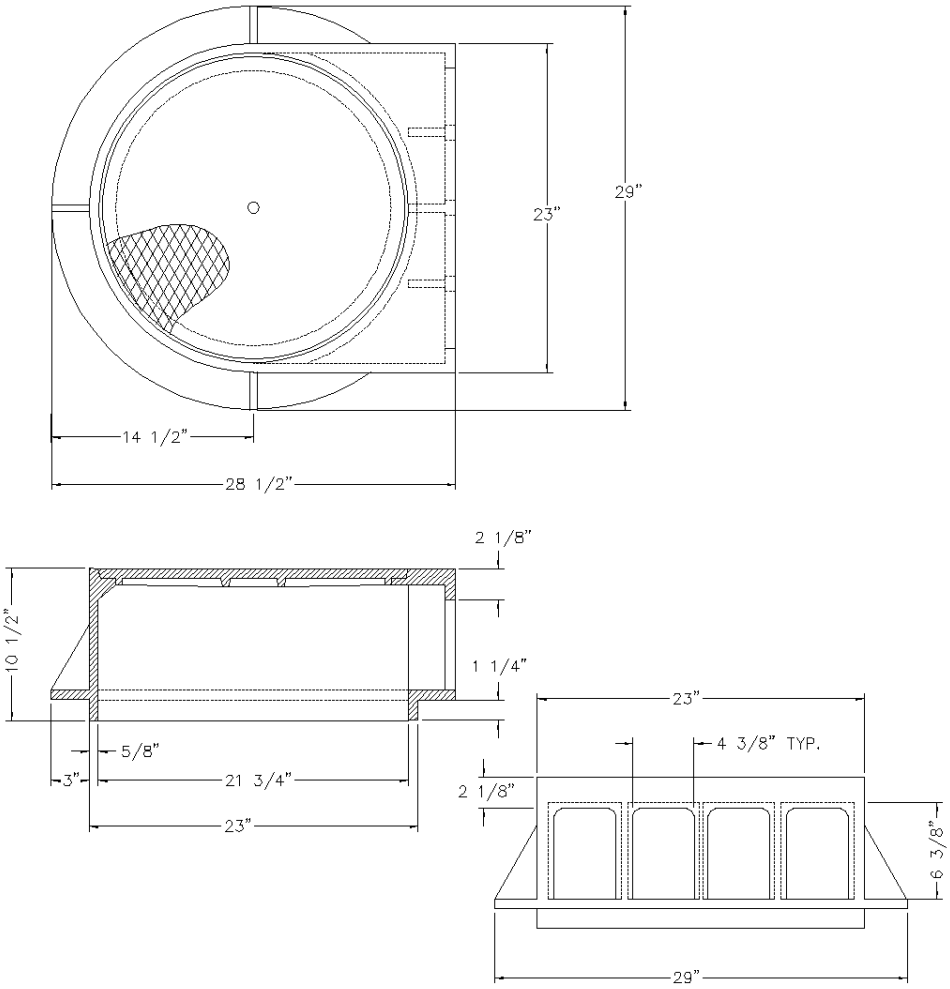

NOTES:			OLYMPIC FOUNDRY INC.		
			CURB INLET FRAME & COVER		
MATL: Cast Iron ASTM A48, CL30			RATING: N/A	PART NO. SM94	
APPROX WT: Frame 210 Lbs, Cover 75 Lbs			REV: A DATE: 7/3/2003 New border		REV A
DOCUMENT APPROVED BY: DATE:	DWN: CL DATE: 7/3/2003	TOLERANCE XX +- .1 XXX +- .06 XXXX +- .030 < +- 2 DEG	REV: DATE:		
	CHKD: CL DATE: 7/3/2003		DWG #: SM94	SCALE: N/A	SHEET: 1 OF 1